UNIT II

LINEAR AND ANGULAR MEASUREMENTS

www.mechanical.in

CONTENTS

2.1 LINEAR MEASURING INSTRUMENTS
- 2.1.1 SCALES
- 2.1.2 CALIPERS
- 2.1.3 VERNIER CALIPERS
- 2.1.4 MICROMETERS
- 2.1.5 SLIP GAUGES

2.2 INTERFEROMETERS
2.3 LIMIT GAUGES
2.4 PLUG GAUGES
2.5 TAPER PLUG GAUGE
2.6 RING GAUGES
2.7 SNAP GAUGE
2.8 TAYLOR' S PRINCIPLE
2.9 COMPARATORS
- 2.9.1 MECHANICAL COMPARATORS
- 2.9.2 ELECTRICAL COMPARATOR
- 2.9.3 ELECTRONIC COMPARATOR

2.10 SINE BAR
2.11 BEVEL PROTRACTORS
- 2.11.1 VERNIER BEVEL PROTRACTOR:

2.12 AUTO- COLLIMATOR
- 2.12.1 WORKING OF AUTO-COLLIMATOR
- 2.12.2 APPLICATIONS OF AUTO-COLLIMATOR

2.13 ANGLE DEKKOR

www.mechanical.in

TECHNICAL TERMS

- **Comparators**

  Comparators are one form of linear measurement device which is quick and more convenient for checking large number of identical dimensions.

- **Least count**

  The least value that can be measured by using any measuring instrument known as least count. Least count of a mechanical comparator is 0.0 1 mm.

- **Caliper**

  Caliper is an instrument used for measuring distance between or over surfaces comparing dimensions of work pieces with such standards as plug gauges, graduated rules etc.

- **Interferometer**

  They are optical instruments used for measuring flatness and determining the length of the slip gauges by direct reference to the wavelength of light.

- **Sine bar**

  Sine bars are always used along with slip gauges as a device for the measurement of angles very precisely.

- **Auto-collimator**

  Auto-collimator is an optical instrument used for the measurement of small angular differences, changes or deflection, plane surface inspection etc.

www.mechanical.in

2.1 LINEAR MEASURING INSTRUMENTS

Linear measurement applies to measurement of lengths, diameter, heights and thickness including external and internal measurements. The line measuring instruments have series of accurately spaced lines marked on them e.g. Scale. The dimensions to be measured are aligned with the graduations of the scale. Linear measuring instruments are designed either for line measurements or end measurements. In end measuring instruments, the measurement is taken between two end surfaces as in micrometers, slip gauges etc.

The instruments used for linear measurements can be classified as:

1. Direct measuring instruments
2. Indirect measuring instruments

The Direct measuring instruments are of two types:

1. Graduated
2. Non Graduated

The graduated instruments include rules, vernier calipers, vernier height gauges, vernier depth gauges, micrometers, dial indicators etc.

The non graduated instruments include calipers, trammels, telescopic gauges, surface gauges, straight edges, wire gauges, screw pitch gauges, radius gauges, thickness gauges, slip gauges etc.

They can also be classified as

1. Non precision instruments such as steel rule, calipers etc.,
2. Precision measuring instruments, such as vernier instruments, micrometers, dial gauges etc.

2.1.1 SCALES

- The most common tool for crude measurements is the scale (also known as **rules, or rulers**).
- Although plastic, wood and other materials are used for common scales, precision scales use tempered steel alloys, with graduations scribed onto the surface.

www.mechanical.in

- These are limited by the human eye. Basically they are used to compare two dimensions.
- The metric scales use decimal divisions, and the imperial scales use fractional divisions.
- Some scales only use the fine scale divisions at one end of the scale. It is advised that the end of the scale not be used for measurement. This is because as they become worn with use, the end of the scale will no longer be at a `zero' position.
- Instead the internal divisions of the scale should be used. Parallax error can be a factor when making measurements with a scale.

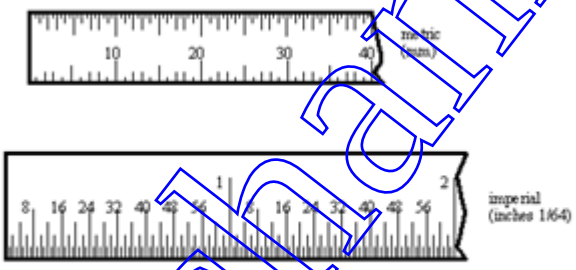

Fig 2.1 Scale

2.1.2 CALIPERS

Caliper is an instrument used for measuring distance between or over surfaces comparing dimensions of work pieces with such standards as plug gauges, graduated rules etc. Calipers may be difficult to use, and they require that the operator follow a few basic rules, do not force them, they will bend easily, and invalidate measurements made. If measurements are made using calipers for comparison, one operator should make all of the measurements (this keeps the feel factor a minimal error source). These instruments are very useful when dealing with hard to reach locations that normal measuring instruments cannot reach. Obviously the added step in the measurement will significantly decrease the accuracy.

www.mechanical.in

2.1.3 VERNIER CALIPERS

The vernier instruments generally used in workshop and engineering metrology have comparatively low accuracy. The line of measurement of such instruments does not coincide with the line of scale. The accuracy therefore depends upon the straightness of the beam and the squareness of the sliding jaw with respect to the beam. To ensure the squareness, the sliding jaw must be clamped before taking the reading. The zero error must also be taken into consideration. Instruments are now available with a measuring range up to one meter with a scale value of 0.1 or 0.2 mm.

Types of Vernier Calipers

According to Indian Standard IS: 3651-1974, three types of vernier calipers have been specified to make external and internal measurements and are shown in figures respectively. All the three types are made with one scale on the front of the beam for direct reading.

Type A: Vernier has jaws on both sides for external and internal measurements and a blade for depth measurement.

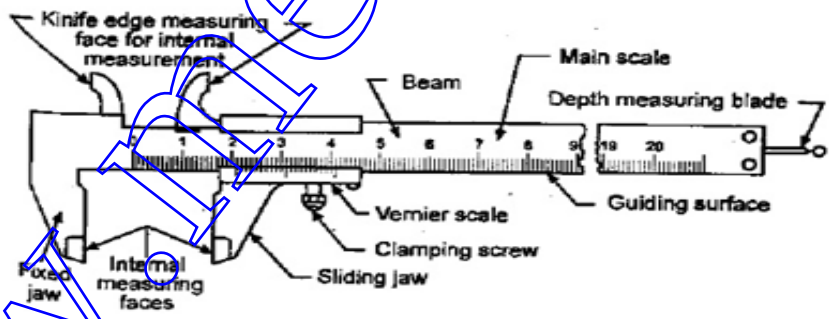

Fig 2.2 Vernier Caliper - Type A

www.mechanical.in

Type B: It is provided with jaws on one side for external and internal measurements.

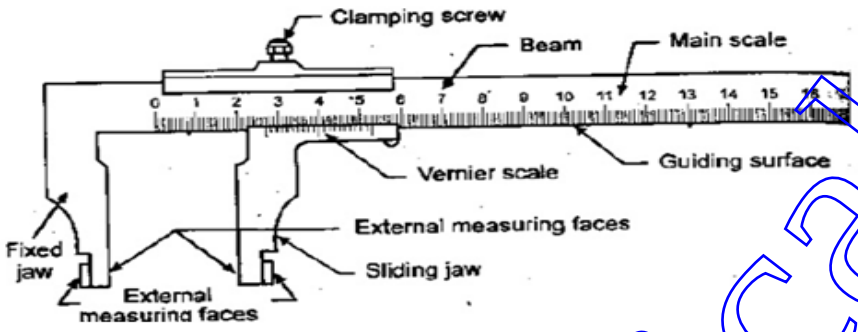

Fig 2.3 Vernier Caliper - Type B

Type C: It has jaws on both sides for making the measurement and for marking operations

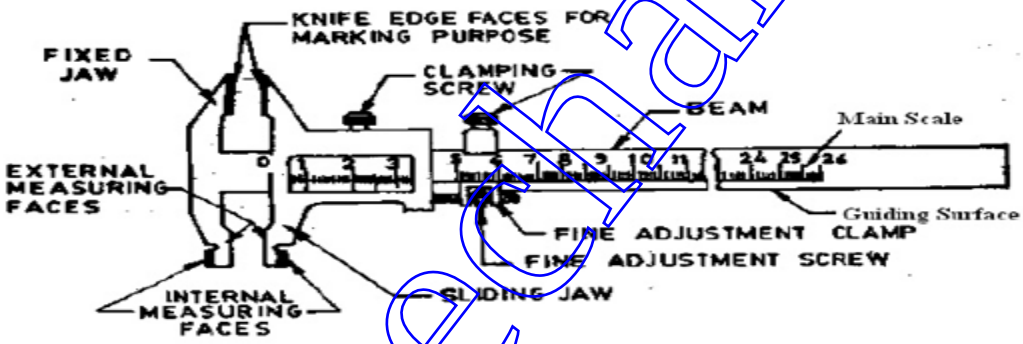

Fig 2.4 Vernier Caliper - Type C

Errors in Calipers

The degree of accuracy obtained in measurement greatly depends upon the condition of the jaws of the calipers and a special attention is needed before proceeding for the measurement. The accuracy and natural wear, and warping of Vernier caliper jaws should be tested frequently by closing them together tightly and setting them to 0-0 point of the main and Vernier scales.

2.1.4 MICROMETERS

There are two types in it.

(i) Outside micrometer — To measure external dimensions.

(ii) Inside micrometer — To measure internal dimensions.

www.mechanical.in

An outside micrometer is shown. It consists of two scales, main scale and thimble scale. While the pitch of barrel screw is 0.5 mm the thimble has graduation of 0.01 mm. The **least count** of this micrometer is 0.01 mm.

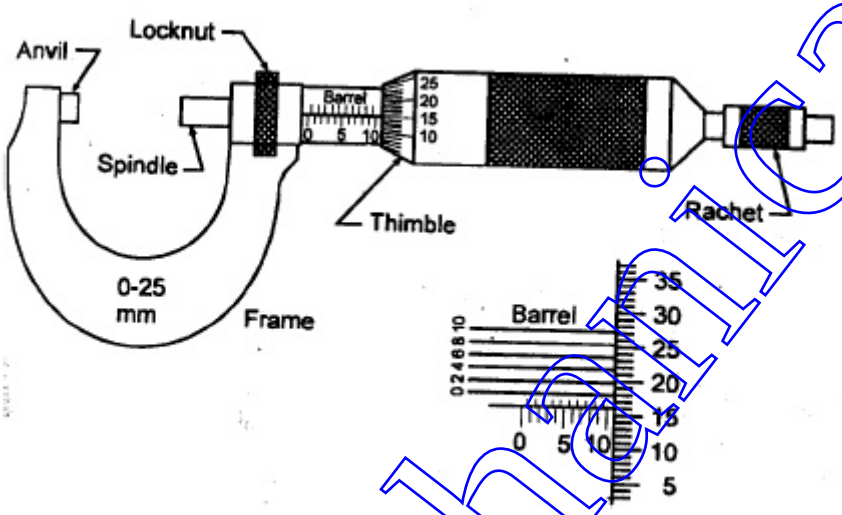

Fig 2.5 Micrometer

The micrometer requires the use of an accurate screw thread as a means of obtaining a measurement. The screw is attached to a spindle and is turned by movement of a thimble or ratchet at the end. The barrel, which is attached to the frame, acts as a nut to engage the screw threads, which are accurately made with a pitch of 0.05mm. Each revolution of the thimble advances the screw 0.05mm. On the barrel a datum line is graduated with two sets of division marks.

2.1.5 SLIP GAUGES

These may be used as reference standards for transferring the dimension of the unit of length from the primary standard to gauge blocks of lower accuracy and for the verification and graduation of measuring apparatus. These are high carbon steel hardened, ground and lapped rectangular blocks, having cross sectional area 0f 30 mm

www.mechanical.in

10mm. Their opposite faces are flat, parallel and are accurately the stated distance apart. The opposite faces are of such a high degree of surface finish, that when the blocks are pressed together with a slight twist by hand, they will wring together. They will remain firmly attached to each other. They are supplied in sets of 112 pieces down to 32 pieces. Due to properties of slip gauges, they are built up by, wringing into combination which gives size, varying by steps of 0.01 mm and the overall accuracy is of the order of 0.00025mm. Slip gauges with three basic forms are commonly found, these are rectangular, square with center hole, and square without center hole.

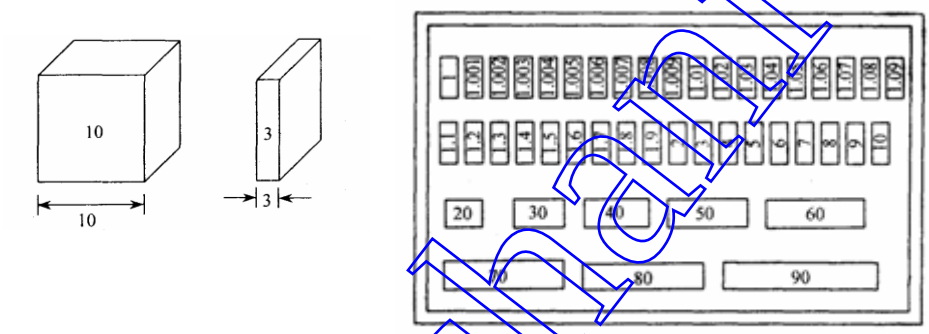

Fig 2.6 Slip Gauge

Wringing or Sliding is nothing but combining the faces of slip gauges one over the other. Due to adhesion property of slip gauges, they will stick together. This is because of very high degree of surface finish of the measuring faces.

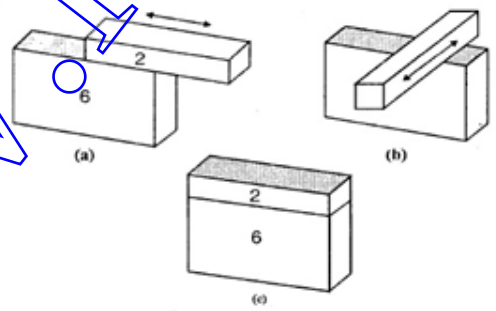

Fig 2.7 Wringing of slip gauge

www.mechanical.in

Classification of Slip Gauges

Slip gauges are classified into various types according to their use as follows:

1) Grade 2

2) Grade 1

3) Grade 0

4) Grade 00

5) Calibration grade.

1) Grade 2:

It is a workshop grade slip gauges used for setting tools, cutters and checking dimensions roughly.

2) Grade 1:

The grade I is used for precise work in tool rooms.

3) Grade 0:

It is used as inspection grade of slip gauges mainly by inspection department.

4) Grade 00:

Grade 00 mainly used in high precision works in the form of error detection in instruments.

5) Calibration grade:

The actual size of the slip gauge is calibrated on a chart supplied by the manufactures.

Manufacture of Slip Gauges

The following additional operations are carried out to obtain the necessary qualities in slip gauges during manufacture.

i. First the approximate size of slip gauges is done by preliminary operations.

ii. The blocks are hardened and wear resistant by a special heat treatment process.

iii. To stabilize the whole life of blocks, seasoning process is done.

iv. The approximate required dimension is done by a final grinding process.

www.mechanical.in

v. To get the exact size of slip gauges, lapping operation is done.

vi. Comparison is made with grand master sets.

Slip Gauges accessories

The application slip gauges can be increased by providing accessories to the slip gauges. The various accessories are

- Measuring jaw
- Scriber and Centre point.
- Holder and base

1. Measuring jaw:

It is available in two designs specially made for internal and external features.

2. Scriber and Centre point:

It is mainly formed for marking purpose.

3. Holder and base:

Holder is nothing but a holding device used to hold combination of slip gauges. Base in designed for mounting the holder rigidly on its top surface.

2.2 INTERFEROMETERS

They are optical instruments used for measuring flatness and determining the length of the slip gauges by direct reference to the wavelength of light. It overcomes the drawbacks of optical flats used in ordinary daylight. In these instruments the lay of the optical flat can be controlled and fringes can be oriented as per the requirement. An arrangement is made to view the fringes directly from the top and avoid any distortion due to incorrect viewing.

www.mechanical.in

2.2.1 Optical Flat and Calibration

1. Optical flat are flat lenses, made from quartz, having a very accurate surface to transmit light.
2. They are used in interferometers, for testing plane surfaces.
3. The diameter of an optical flat varies from 50 to 250 nun and thickness varies from 12 to 25 mm.
4. Optical flats are made in a range of sizes and shapes.
5. The flats are available with a coated surface.
6. The coating is a thin film, usually titanium oxide, applied on the surface to reduce the light lost by reflection.
7. The coating is so thin that it does not affect the position of the fringe bands, but a coated flat. The supporting surface on which the optical flat measurements are made must provide a clean, rigid platform. Optical flats are cylindrical in form, with the working surface and are of two types are i) type A, ii) type B.

i) Type A:

It has only one surface flat and is used for testing flatness of precision measuring surfaces of flats, slip gauges and measuring tables. The tolerance on flat should be 0.05 µm for type A.

ii) Type B:

It has both surfaces flat and parallel to each other. They are used for testing measuring surfaces of micrometers, Measuring anvils and similar length of measuring devices for testing flatness and parallelism. For these instruments, their thickness and grades are important. The tolerances on flatness, parallelism and thickness should be 0.05 µm.

www.mechanical.in

2.2.2 Interference Bands by Optical Flat

Optical flats arc blocks of glass finished to within 0.05 microns for flatness. When art optical flat is on a flat surface which is not perfectly flat then optical flat will not exactly coincide with it, but it will make an angle e with the surface as shown in Figure 2.8.

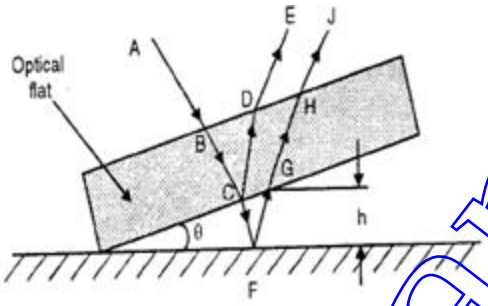

Fig 2.8 Optical Flat

2.3 LIMIT GAUGES

- A limit gauge is not a measuring gauge. Just they are used as inspecting gauges.
- The limit gauges are used in inspection by methods of attributes.
- This gives the information about the products which may be either within the prescribed limit or not.
- By using limit gauges report, the control charts of P and C charts are drawn to control invariance of the products.
- This procedure is mostly performed by the quality control department of each and every industry.
- Limit gauge are mainly used for checking for cylindrical holes of identical components with a large numbers in mass production.

www.mechanical.in

2.3.1 Purpose of using limit gauges

- Components are manufactured as per the specified tolerance limits, upper limit and lower limit. The dimension of each component should be within this upper and lower limit.
- If the dimensions are outside these limits, the components will be rejected.
- If we use any measuring instruments to check these dimensions, the process will consume more time. Still we are not interested in knowing the amount of error in dimensions.
- It is just enough whether the size of the component is within the prescribed limits or not. For this purpose, we can make use of gauges known as limit gauges.

The common types are as follows:

1) Plug gauges.
2) Ring gauges.
3) Snap gauges.

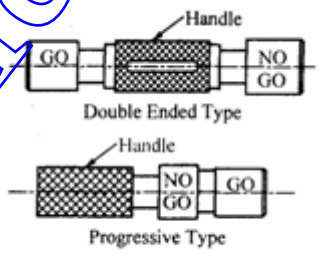

Fig 2.9 Plug Gauge

2.4 PLUG GAUGES

- The ends are hardened and accurately finished by grinding. One end is the GO end and the other end is NOGO end.
- Usually, the GO end will be equal to the lower limit size of the hole and the NOGO end will be equal to the upper limit size of the hole.
- If the size of the hole is within the limits, the GO end should go inside the hole and NOGO end should not go.
- If the GO end and does not go, the hole is under size and also if NOGO end goes, the hole is **over size**. Hence, the components are rejected in both the cases.

www.mechanical.in

1. Double ended plug gauges

In this type, the GO end and NOGO end are arranged on both the ends of the plug. This type has the advantage of easy handling.

2. Progressive type of plug gauges

In this type both the GO end and NOGO end are arranged in the same side of the plug. We can use the plug gauge ends progressively one after the other while checking the hole. It saves time. Generally, the GO end is made larger than the NOGO end in plug gauges.

2.5 TAPER PLUG GAUGE

Taper plug gauges are used to check tapered holes. It has two check lines. One is a GO line and another is a NOGO line. During the checking of work, NOGO line remains outside the hole and GO line remains inside the hole.

They are various types taper plug gauges are available as shown in fig. Such as

1) Taper plug gauge — plain
2) Taper plug gauge — tanged.
3) Taper ring gauge plain
4) Taper ring gauge — tanged.

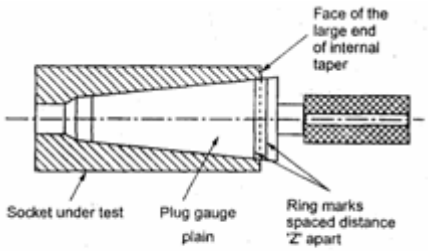

Fig 2.10 Taper Gauge

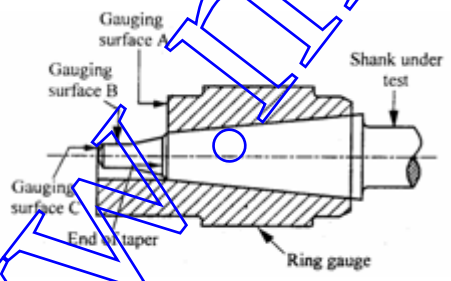

Fig 2.11 Taper ring Gauge plain

www.mechanical.in

2.6 RING GAUGES

- Ring gauges are mainly used for checking the diameter of shafts having a central hole. The hole is accurately finished by grinding and lapping after taking hardening process.
- The periphery of the ring is knurled to give more grips while handling the gauges. We have to make two ring gauges separately to check the shaft such as GO ring gauge and NOGO ring gauge.
- But the hole of GO ring gauge is made to the upper limit size of the shaft and NOGO for the lower limit.
- While checking the shaft, the GO ring gauge will pass through the shaft and NOGO will not pass.
- To identify the NOGO ring gauges easily, a red mark or a small groove cut on its periphery.

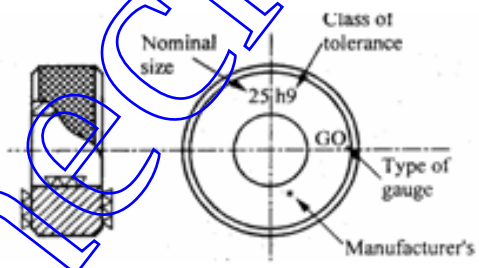

Fig 2.12 Ring Gauge

2.7 SNAP GAUGE

Snap gauges are used for checking external dimensions. They are also called as gap gauges. The different types of snap gauges are:

www.mechanical.in

1. Double Ended Snap Gauge

This gauge is having two ends in the form of anvils. Here also, the GO anvil is made to lower limit and NOGO anvil is made to upper limit of the shaft. It is also known as solid snap gauges

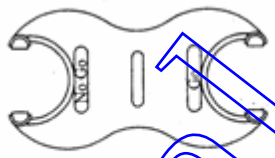

Fig 2.13 Double ended Snap Gauge

2. Progressive Snap Gauge

This type of snap gauge is also called caliper gauge. It is mainly used for checking large diameters up to 100mm. Both GO and NOGO anvils at the same end. The GO anvil should be at the front and NOGO anvil at the rear. So, the diameter of the shaft is checked progressively by these two ends. This type of gauge is made of horse shoe shaped frame with I section to reduce the weight of the snap gauges.

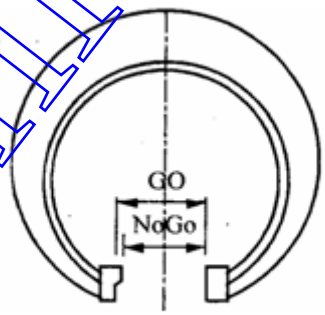

Fig 2.14 Progressive Snap Gauge

3. Adjustable Snap Gauge

Adjustable snap gauges are used for checking large size shafts made with horseshoe shaped frame of I section. It has one fixed anvil and two small adjustable anvils. The distance between the two anvils is adjusted by adjusting the adjustable anvils by means of setscrews. This adjustment can be made with the help of slip gauges for specified limits of size.

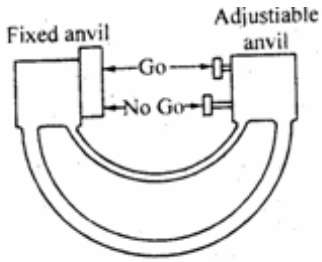

Fig 2.15 Adjustable Snap Gauge

www.mechanical.in

4. Combined Limit Gauges

A spherical projection is provided with GO and NOGO dimension marked in a single gauge. While using GO gauge the handle is parallel to axes of the hole and normal to axes for NOGO gauge.

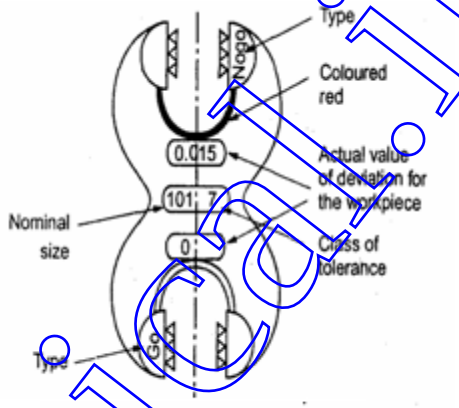

Fig 2.16 Combined Limit Gauge

5. Position Gauge

It is designed for checking the position of features in relation to another surface. Other types of gauges are also available such as contour gauges, receiver gauges, profile gauges etc.

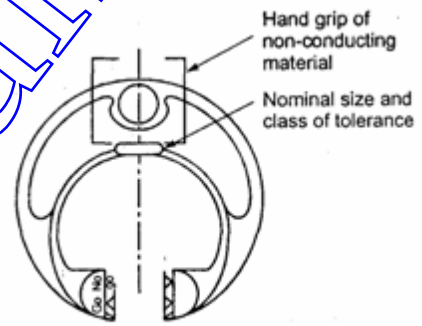

Fig 2.17 Position Gauge

2.8 TAYLOR' S PRINCIPLE

It states that GO gauge should check all related dimensions. Simultaneously NOGO gauge should check only one dimension at a time.

Maximum metal condition

It refers to the condition of hole or shaft when maximum material is left on i.e. high limit of shaft and low limit of hole.

Minimum metal condition

If refers to the condition of hole or shaft when minimum material is left on such as low limit of shaft and high limit of hole.

www.mechanical.in

Applications of Limit Gauges

1. Thread gauges
2. Form gauges
3. Serew pitch gauges
4. Radius and fillet gauges
5. Feeler gauges
6. Plate gauge and Wire gauge

2.9 COMPARATORS

Comparators are one form of linear measurement device which is quick and more convenient for checking large number of identical dimensions. Comparators normally will not show the actual dimensions of the work piece. They will be shown only the deviation in size. i.e. During the measurement a comparator is able to give the deviation of the dimension from the set dimension. This cannot be used as an absolute measuring device but can only compare two dimensions. Comparators are designed in several types to meet various conditions. Comparators of every type incorporate some kind of magnifying device. The magnifying device magnifies how much dimension deviates, plus or minus, from the standard size.

The comparators are classified according to the principles used for obtaining magnification. The common types are:

1) Mechanical comparators
2) Electrical comparators
3) Optical comparators
4) Pneumatic comparators

www.mechanical.in

2.9.1 MECHANICAL COMPARATORS

Mechanical comparator employs mechanical means for magnifying small deviations. The method of magnifying small movement of the indicator in all mechanical comparators are effected by means of levers, gear trains or a combination of these elements. Mechanical comparators are available having magnifications from 300 to 5000 to 1. These are mostly used for inspection of small parts machined to close limits.

1. Dial indicator

A dial indicator or dial gauge is used as a mechanical comparator. The essential parts of the instrument are like a small clock with a plunger projecting at the bottom as shown in fig. Very slight upward movement on the plunger moves it upward and the movement is indicated by the dial pointer. The dial is graduated into 100 divisions. A full revolution of the pointer about this scale corresponds to 1mm travel of the plunger. Thus, a turn of the pointer b one scale division represents a plunger travel of 0.01mm.

Experimental setup

The whole setup consists of worktable, dial indicator and vertical post. The dial indicator is fitted to vertical post by on adjusting screw as shown in fig. The vertical post is fitted on the work table; the top surface of the worktable is finely finished. The dial gauge can be adjusted vertically and locked in position by a screw.

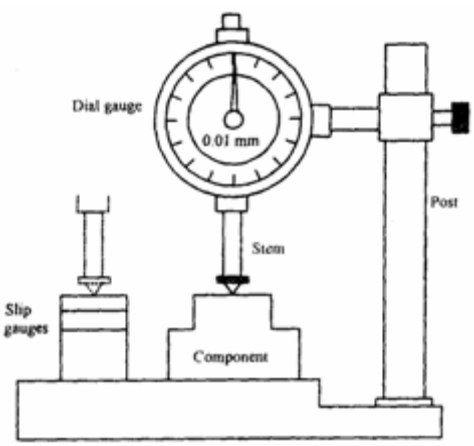

Fig 2.18 Dial Indicator

Procedure

Let us assume that the required height of the component is 32.5mm. Initially this height is built up with slip gauges. The slip gauge blocks are placed under the stem of the dial gauge. The pointer in the dial gauge is adjusted to zero. The slip gauges are removed.

www.mechanical.in

Now the component to be checked is introduced under the stem of the dial gauge. If there is any deviation in the height of the component, it will be indicated by the pointer.

Mechanism

The stem has rack teeth. A set of gears engage with the rack. The pointer is connected to a small pinion. The small pinion is independently hinged. I.e. it is not connected to the stern. The vertical movement of the stem is transmitted to the pointer through a set of gears. A spring gives a constant downward pressure to the stem.

2. Read type mechanical comparator

In this type of comparator, the linear movement of the plunger is specified by means of read mechanism. The mechanism of this type is illustrated in fig. A spring-loaded pointer is pivoted. Initially, the comparator is set with the help of a known dimension eg. Set of slip gauges as shown in fig. Then the indicator reading is adjusted to zero. When the part to be measured is kept under the pointer, then the comparator displays the deviation of this dimension either in ± or— side of the set dimension.

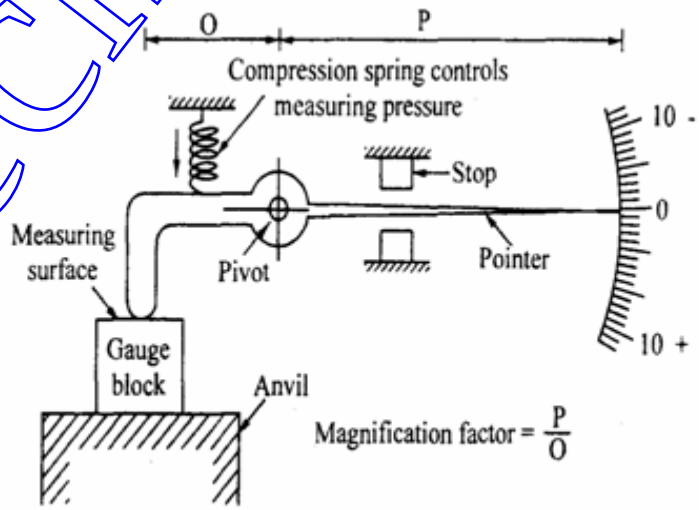

Fig 2.18 Read type Mechanical Comparator

www.mechanical.in

Advantages

1) It is usually robust, compact and easy to handle.
2) There is no external supply such as electricity, air required.
3) It has very simple mechanism and is cheaper when compared to other types.
4) It is suitable for ordinary workshop and also easily portable.

Disadvantages

1) Accuracy of the comparator mainly depends on the accuracy of the rack and pinion arrangement. Any slackness will reduce accuracy.
2) It has more moving parts and hence friction is more and accuracy is less.
3) The range of the instrument is limited since pointer is moving over a fixed scale.

2.9.2 ELECTRICAL COMPARATOR:

An electrical comparator consists of the following three major part such as

1) Transducer
2) Display device as meter
3) Amplifier

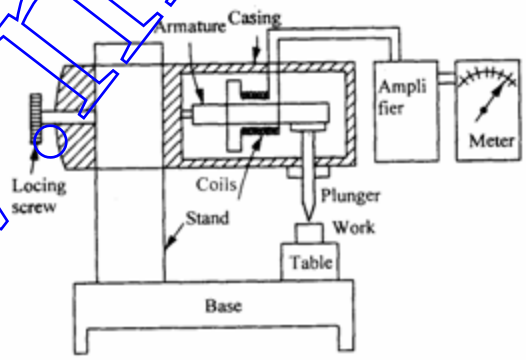

Fig 2.19 Electrical Comparator

www.mechanical.in

Transducer

An iron armature is provided in between two coils held by a lea spring at one end. The other end is supported against a plunger. The two coils act as two arms of an A.C. wheat stone bridge circuit.

Amplifier

The amplifier is nothing but a device which amplifies the give input signal frequency into magnified output

Display device or meter

The amplified input signal is displayed on some terminal stage instruments. Here, the terminal instrument is a meter.

Working principle

If the armature is centrally located between the coils, the inductance of both coils will be equal but in opposite direction with the sign change. Due to this, the bridge circuit of A.C. wheat stone bridge is balanced. Therefore, the meter will read zero value. But practically, it is not possible. In real cases, the armature may be lifted up or lowered down by the plunger during the measurement. This would upset the balance of the wheat stone bridge circuit. Due to this effect, the change in current or potential will be induced correspondingly. On that time, the meter will indicate some value as displacement. This indicated value may be either for larger or smaller components. As this induced current is too small, it should be suitably amplified before being displayed in the meter.

Checking of accuracy

To check the accuracy of a given specimen or work, first a standard specimen is placed under the plunger. After this, the resistance of wheat stone bridge is adjusted so

www.mechanical.in

that the scale reading shows zero. Then the specimen is removed. Now, the work is introduced under the plunger. If height variation of work presents, it will move the plunger up or down. The corresponding movement of the plunger is first amplified by the amplifier then it is transmitted to the meter to show the variations. The least count of this electrical comparator is **0.001mm (one micron).**

2.9.3 ELECTRONIC COMPARATOR

In electronic comparator, transducer induction or the principle of application of frequency modulation or radio oscillation is followed.

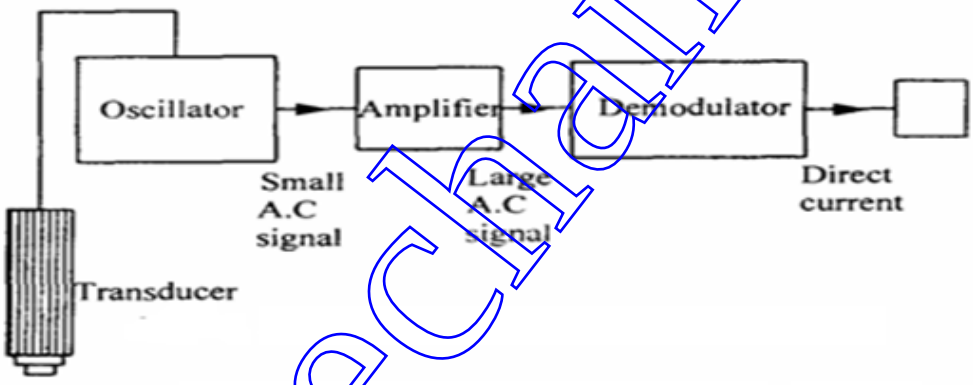

Fig 2.20 ***Principle of operation in electric gauging***

Construction details

In the electronic comparator, the following components are set as follows:

i. Transducer

ii. Oscillator

iii. Amplifier

iv. Demodulator

v. Meter

(i) Transducer

It converts the movement of the plunger into an electrical signal. It is connected with oscillator.

www.mechanical.in

(ii) Oscillator

The oscillator which receives electrical signal from the transducer and raises the amplitude of frequency wave by adding carrier frequency called as modulation.

(iii) Amplifier

An amplifier is connected in between oscillator and demodulator. The signal coming out of the oscillator is amplified into a required level.

(iv) Demodulator

Demodulator is nothing but a device which cuts off external carrier wave frequency. i.e. It converts the modulated wave into original wave as electrical signal.

(v) Meter

This is nothing but a display device from which the output can be obtained as a linear measurement.

2.9.3.1 Principle of operation

The work to be measured is placed under the plunger of the electronic comparator. Both work and comparator are made to rest on the surface plate. The linear movement of the plunger is converted into electrical signal by a suitable transducer. Then it sent to an oscillator to modulate the electrical signal by adding carrier frequency of wave. After that the amplified signal is sent to demodulator in which the carrier waves are cut off. Finally, the demodulated signal is passed to the meter to convert the probe tip movement into linear measurement as an output signal. A separate electrical supply of D.C. is already given to actuate the meter.

2.9.3.2 Advantages of Electrical and Electronic comparator

1) It has less number of moving parts.

2) Magnification obtained is very high.

www.mechanical.in

3) Two or more magnifications are provided in the same instrument to use various ranges.

4) The pointer is made very light so that it is more sensitive to vibration.

5) The instrument is very compact.

2.9.3.3 Disadvantages of Electrical and Electronic comparator

1) External agency is required to meter for actuation.

2) Variation of voltage or frequency may affect the accuracy of output.

3) Due to heating coils, the accuracy decreases.

4) It is more expensive than mechanical comparator.

2.10 SINE BAR

Sine bars are always used along with slip gauges as a device for the measurement of angles very precisely. They are used to

1) Measure angles very accurately.

2) Locate the work piece to a given angle with very high precision.

Generally, sine bars are made from high carbon, high chromium, and corrosion resistant steel. These materials are highly hardened, ground and stabilized. In sine bars, two cylinders of equal diameter are attached at lie ends with its axes are mutually parallel to each other. They are also at equal distance from the upper surface of the sine bar mostly the distance between the axes of two cylinders is 100mm, 200mm or 300mm. The working surfaces of the rollers are finished to 0.2µm R value. The cylindrical holes are provided to reduce the weight of the sine bar.

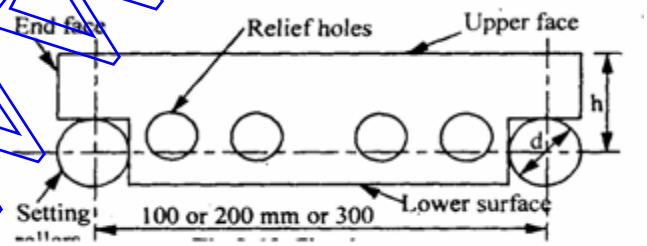

Fig 2.21 Sine Bar

www.mechanical.in

2.10.1 Working principle of sine bar

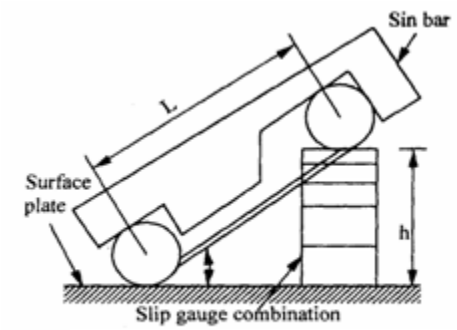

Fig 2.22 Principle of Sine bar

The working of sine bar is based on **trigonometry principle**. To measure the angle of a given specimen, one roller of the sine bar is placed on the surface plate and another one roller is placed over the surface of slip gauges. Now, 'h be the height of the slip gauges and 'L' be the distance between roller centers, then the angle is calculated as

$$\text{Sin}\theta = \frac{h}{L}$$

$$\therefore \theta = Sin^{-1}(h/L)$$

2.10.2 Use of Sine Bar

Locating any' work to a given angle

i. To set at a given angle θ, first '*h*' of slip gauge is calculated by the formula $Sin\theta = h/L$
ii. After calculating the height '*h*', the required height '*h*' is made by using suitable slip gauge combinations.
iii. After this, one of the rollers is placed on the top of the sine bar and the other one is placed on the top of the slip gauge combination.

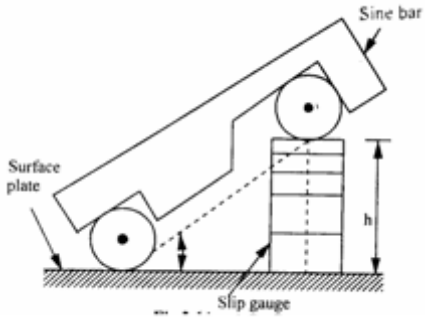

Fig 2.23 Work Location

www.mechanical.in

1) Before checking the unknown angle of the specimen, first the angle (0) of given specimen is found approximately by bevel protractor.

2) Then the sine bar is set at angle of 0 and clamped on the angle plate.

3) Now, the work is placed on the sine bar and the dial indicator set at one end of the work is moved across the work piece and deviation is noted.

4) Slip gauges are adjusted so that the dial indicator reads zero throughout the work surface.

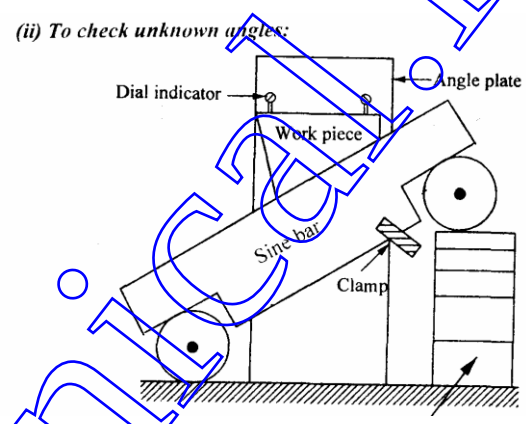

Limitations of sine bars

1) Sine bars are fairly reliable for angles than 15°.
2) It is physically difficult to hold in position.
3) Slight errors in sine bar cause larger angular errors.
4) A difference of deformation occurs at the point of roller contact with the surface plate and to the gauge blocks.
5) The size of parts to be inspected by sine bar is limited.

Sources of error in sine bars

The different sources of errors are listed below:

1) Error in distance between roller centers.
2) Error in slip gauge combination.
3) Error in checking of parallelism.
4) Error in parallelism of roller axes with each other.
5) Error in flatness of the upper surface of sine bar.

2.11 BEVEL PROTRACTORS

Bevel protractors are nothing but angular measuring instruments.

Types of bevel protractors:

The different types of bevel protractors used are:

www.mechanical.in

1) Vernier bevel protractor
2) Universal protractor
3) Optical protractor

2.11.1 VERNIER BEVEL PROTRACTOR:

Working principle

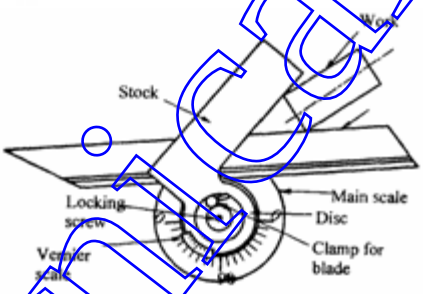

Fig 2.24 Vernier Bevel Protractor

A vernier bevel protractor is attached with acute angle attachment. The body is designed its back is flat and no projections beyond its back. The base plate is attached to the main body and an adjustable blade is attached to the circular plate containing Vernier scale. The main scale is graduated in degrees from 0° to 90° in both the directions. The adjustable can be made to rotate freely about the center of the main scale and it can be locked at any position. For measuring acute angle, a special attachment is provided. The base plate is made fiat for measuring angles and can be moved throughout its length. The ends of the blade are beveled at angles of 45° and 60°. The main scale is graduated as one main scale division is 1° and Vernier is graduated into 12 divisions on each side of zero. Therefore the least count is calculated as

$$Least\ count = \frac{One\ main\ scale\ division}{No.\ of\ divisions\ on\ vernier\ scale}$$

$$= \frac{1^\circ}{12}(\text{degrees})$$

$$= \frac{1}{12} \times 60 = 5\ \text{minutes}$$

Thus, the bevel protractor can be used to measure to an accuracy of 5 minutes.

www.mechanical.in

Applications of bevel protractor

The bevel protractor can be used in the following applications.

1. **For checking a 'V' block:**

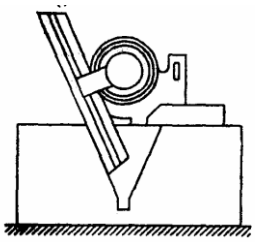

2. For measuring acute angle:

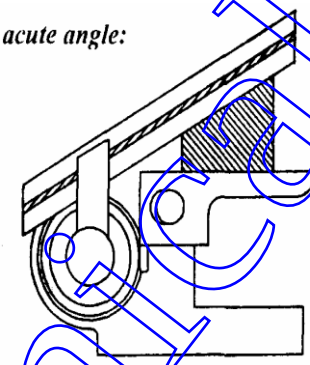

3. For checking in inside beveled face of a ground surface.

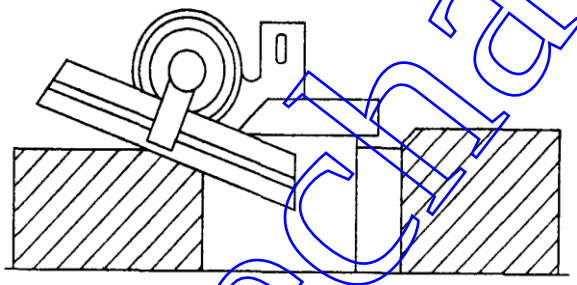

www.mechanical.in

2.12 AUTO- COLLIMATOR

Auto-collimator is an optical instrument used for the measurement of small angular differences, changes or deflection, plane surface inspection etc. For small angular measurements, autocollimator provides a very sensitive and accurate approach. An auto-collimator is essentially an infinity telescope and a collimator combined into one instrument.

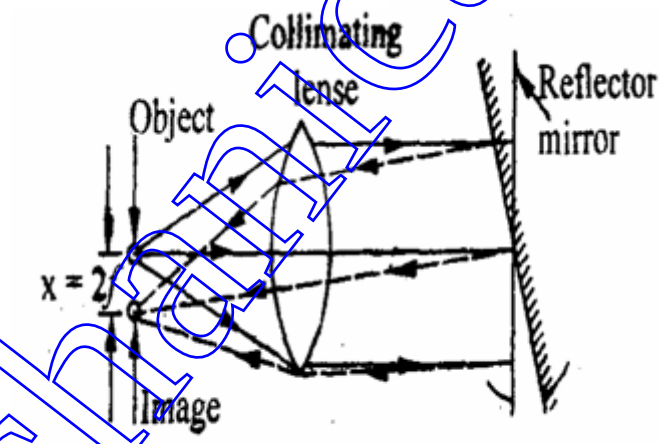

Fig 2.25 Auto-Collimator

Basic principle

If a light source is placed in the flows of a collimating lens, it is projected as a parallel beam of light. If this beam is made to strike a plane reflector, kept normal to the optical axis, it is reflected back along its own path and is brought to the same focus. The reflector is tilted through a small angle '0'. Then the parallel beam is deflected twice the angle and is brought to focus in the same plane as the light source.

The distance of focus from the object is given by

$$x = 2\theta \cdot f$$

Where, f = Focal length of the lens

θ = Fitted angle of reflecting mirror.

www.mechanical.in

2.12.1 WORKING OF AUTO-COLLIMATOR:

There are three main parts in auto-collimator.

1. Micrometer microscope.
2. Lighting unit and
3. Collimating lens.

Figure shows a line diagram of a modern auto-collimator. A target graticule is positioned perpendicular to the optical axis. When the target graticule is illuminated by a lamp, rays of light diverging from the intersection point reach the objective lens via beam splitter. From objective, the light rays are projected as a parallel rays to the reflector.

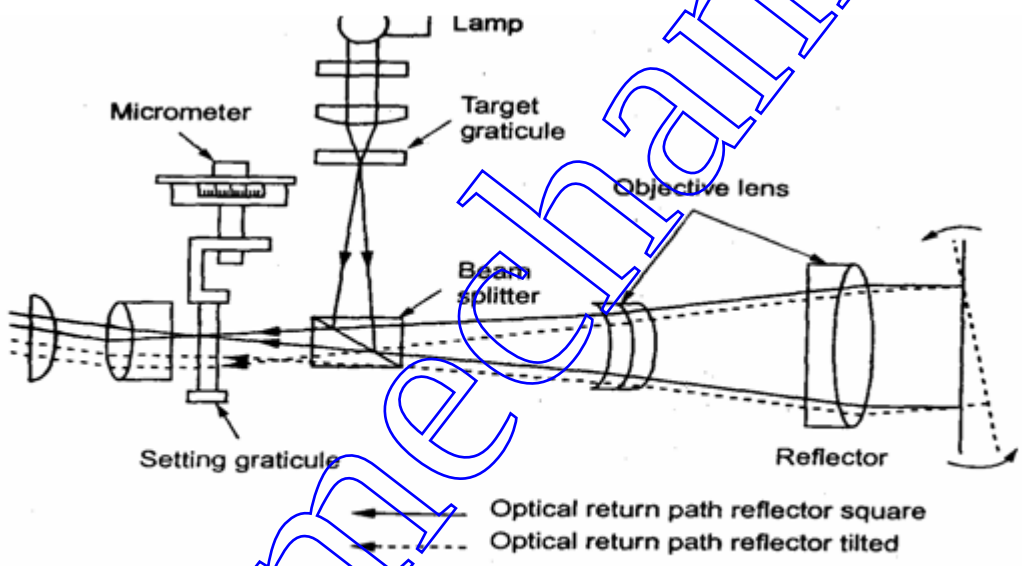

Fig 2.26 Line diagram of an injected graticule auto-collimator

A flat reflector placed in front of the objective and exactly normal to the optical axis reflects the parallel rays of light back along their original paths. They are then brought to the target graticule and exactly coincide with its intersection. A portion of the returned light passes through the beam splitter and is visible through the eyepiece. If the reflector is tilted through a small angle, the reflected beam will be changed its path at twice the angle. It can also be brought to target graticule but linearly displaced from the actual target by the amount 2θ x f. linear displacement of the graticule image in the plane

www.mechanical.in

tilted angle of eyepiece is directly proportional to the reflector. This can be measured by optical micrometer. The photoelectric auto- collimator is particularly suitable for calibrating polygons, for checking angular indexing and for checking small linear displacements.

2.12.2 APPLICATIONS OF AUTO-COLLIMATOR

Auto-collimators are used for

1) Measuring the difference in height of length standards.
2) Checking the flatness and straightness of surfaces.
3) Checking square ness of two surfaces.
4) Precise angular indexing in conjunction with polygons.
5) Checking alignment or parallelism.
6) Comparative measurement using master angles.
7) Measurement of small linear dimensions.
8) For machine tool adjustment testing.

2.13 ANGLE DEKKOR

This is also a type of auto-collimator. There is an illuminated scale in the focal plane of the collimating lens. This illuminated scale is projected as a parallel beam by the collimating lens which after striking a reflector below the instrument is refocused by the lens in the filed of view of the eyepiece. In the field of view of microscope, there is another datum scale fixed across the center of screen. The reflected image of the illuminated scale is received at right angle to the fixed scale as shown in fig. Thus the changes in angular position of the reflector in two planes are indicated by changes in the point of intersection of the two scales. One division on the scale is calibrated to read 1 minute.

www.mechanical.in

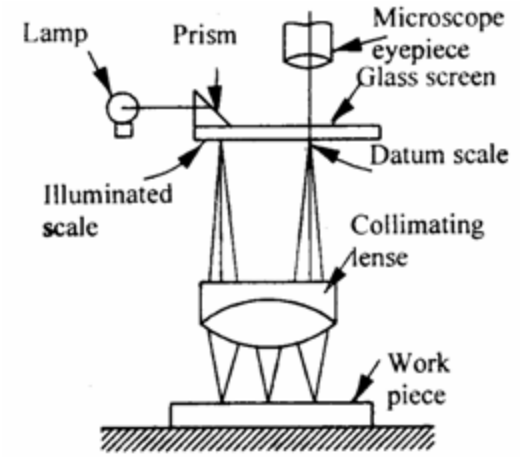

Fig 2.27 Angle Dekkor

2.13.1 Uses of Angle Dekkor

(i) Measuring angle of a component

Angle dekkor is capable of measuring small variations in angular setting i.e. determining angular tilt. Angle dekkor is used in combination with angle gauge. First the angle gauge combination is set up to the nearest known angle of the component. Now the angle dekkor is set to zero reading on the illuminated scale. The angle gauge build up is then removed and replaced by the component under test. Usually a straight edge being used to ensure that there is no change in lateral positions. The new position of the reflected scale with respect to the fixed scale gives the angular tilt of the component from the set angle.

www.mechanical.in

(ii) Checking the slope angle of a V-block

Figure shows the set up for checking the sloping angle of V block. Initially, a polished reflector or slip gauge is attached in close contact with the work surface. By using angle gauge zero reading is obtained in the angle dekkor. Then the angle may be calculated by comparing the reading obtained from the angle dekkor and angle gauge.

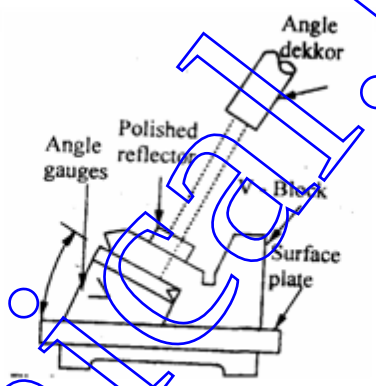

Fig 2.28 Checking of V-Slope Angle Dekkor

(iii) To measure the angle of cone or Taper gauge

Initially, the angle dekkor is set for the nominal angle of cone by using angle gauge or sine bar. The cone is then placed in position with its base resting on the surface plate. A slip gauge or reflector is attached on the cone since no reflection can be obtained from the curved surface. Any deviation from the set angle will be noted by the angle dekkor in the eyepiece and indicated by the shifting of the image of illuminated scale.

www.mechanical.in

QUESTION BANK

Part-A (2 Marks)

1. List the various linear measurements?
2. What are the various types of linear measuring instruments?
3. List out any four angular measuring instrument used in metrology
4. What is comparator?
5. Classify the comparator according to the principles used for obtaining magnification.
6. How are all mechanical comparator effected?
7. State the best example of a mechanical comparator.
8. Define least count and mention the least count of a mechanical comparator.
9. How the mechanical comparator is used? State with any one example.
10. State any four advantages of reed type mechanical comparator.

Part-B (16 Marks)

1. What is the constructional difference between an autocollimator and an angle dekkor.
2. Explain with the help of neat sketches, the principle and construction of an auto-collimator
3. What types of measuring systems are used for linear distance?
4. Explain the working principle of mechanical comparator with a neat sketch.
5. Explain the working principle of Electrical comparator with a neat sketch
6. Explain the working principle of pneumatic comparator with a neat sketch
7. Explain with the help of neat sketches, the principle and construction of an Angle dekkor.
8. Explain the precautionary measures one shall follow at various stages of using slip gauges. Explain the process of 'Wringing' in slip gauges. Explain why sine bars are not suitable for measuring angles above 45 degrees.
9. Describe the method of checking the angle of a taper plug gauge using rollers, micrometer and slip gauges,
10. State and explain the "Taylor's principle of gauge design'.

www.mechanical.in

11. Explain the working principle of autocollimator and briefly explain its application
12. Describe with the help of a near sketch, a vernier bevel protractor.
13. Shafts of 75± 0.02 mm diameter are to be checked by the help of a Go, Not Go snap gauges. Design the gauge, sketch it and show its Go size and Not Go size dimensions. Assume normal wear allowance and gauge maker's tolerance.

www.mechanical.in